Heating coils on deck - Corrosion protection

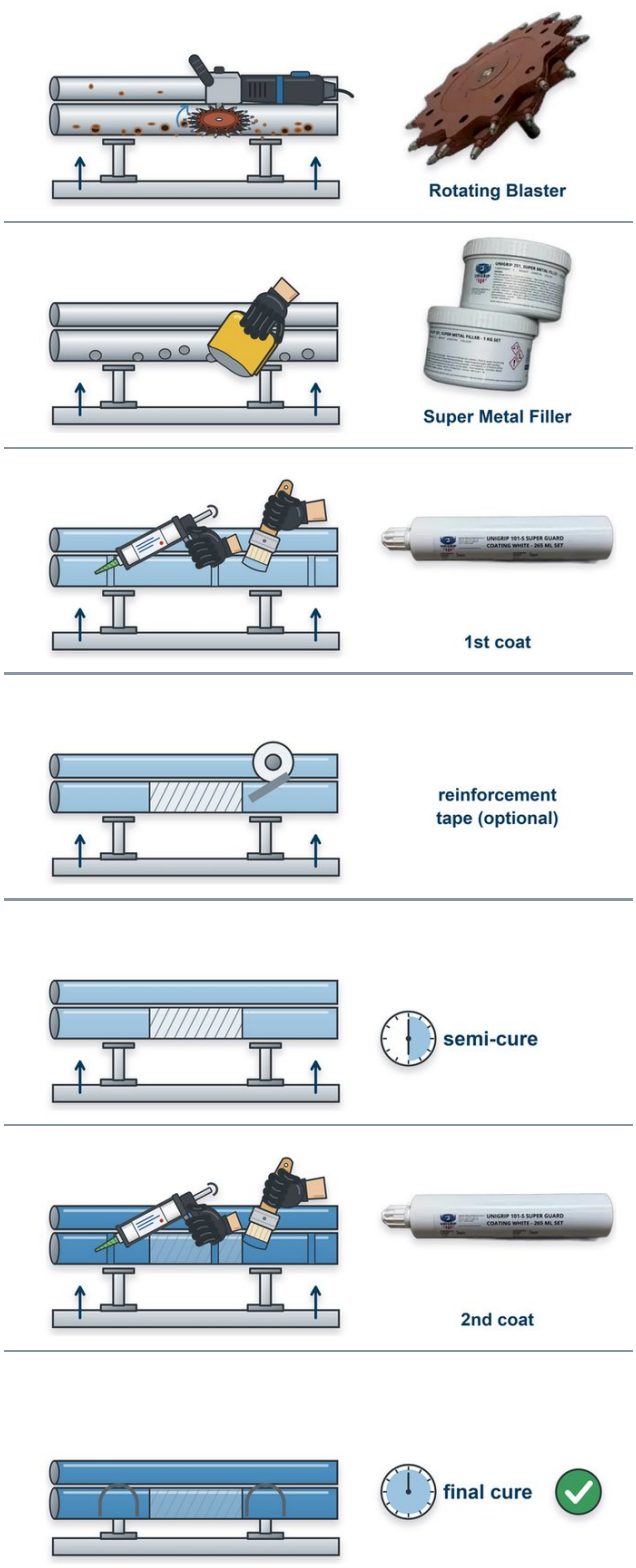

Restore corroded heating coil pipework on deck and protect it against external corrosion.

1. Isolate, drain and cool the system. Loosen the U-bolts and lift the pipes clear of the supports. Surface preparation acc. to SepcoTech standards.

2. Rebuild local pitting with SepcoTech Super Metal Filler to restore a smooth pipe profile.

3. Apply a stripe coat of SepcoTech Super Guard to welds, bends and the pipe undersides, followed by the first full coat - 200 µm DFT.

4. Where specified, wrap reinforcement tape into the wet coating with approx. 50% overlap.

5. Allow semi-curing.

6. Apply a second stripe coat and the second full coat of Super Guard - 200 µm DFT (400 µm in total).

7. Allow final curing. Reinstall the pipes in the supports and return to service.

Note: The pipe undersides and support points are often the most critical areas. Confirm product suitability for the operating temperature.

Includes AI generated images