Propeller shaft - Corrosion protection

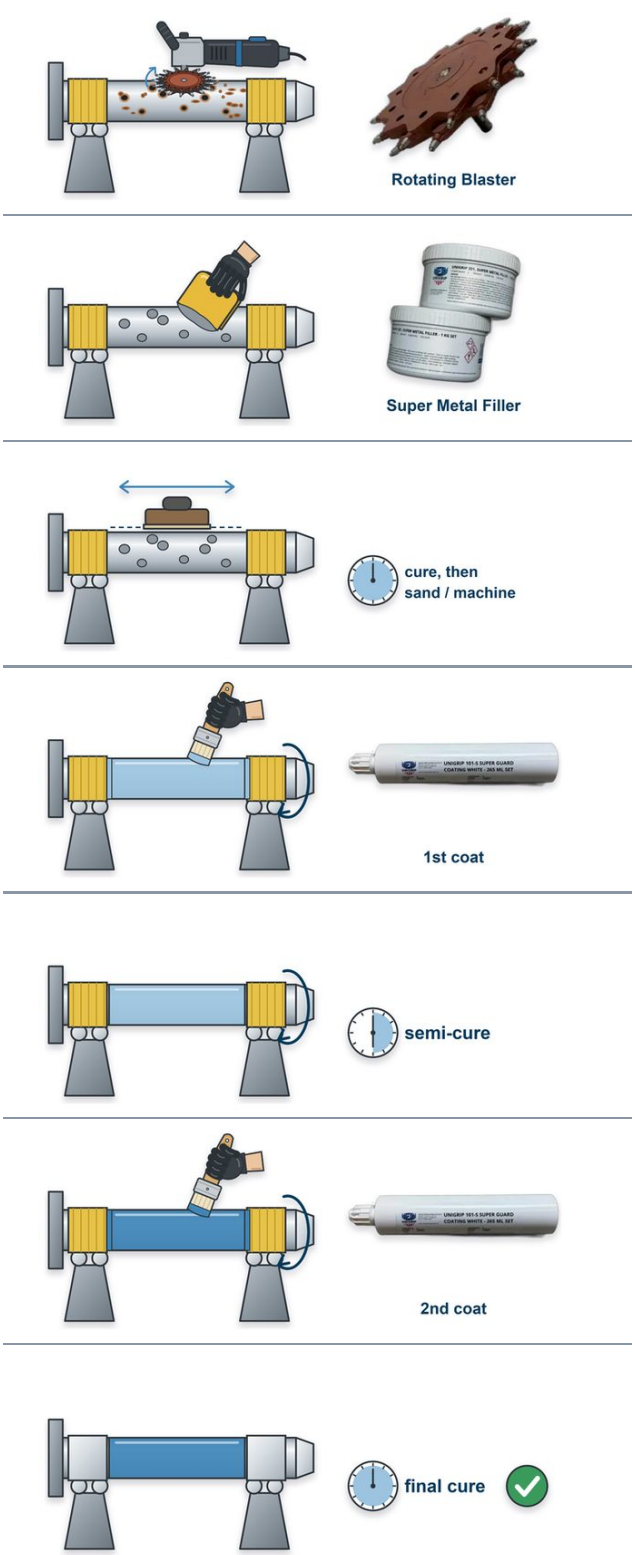

Protect exposed propeller shaft surfaces against galvanic corrosion and seawater exposure.

1. Inspect the shaft and mask bearing journals, seal surfaces, coupling fits and threads. Surface preparation acc. to SepcoTech standards.

2. Rebuild local pitting with SepcoTech Super Metal Filler where approved.

3. Allow curing and restore the surface geometry by sanding or machining.

4. Apply a stripe coat of SepcoTech Super Guard, followed by the first full coat - 200 µm DFT by brush while rotating the shaft slowly.

5. Allow semi-curing.

6. Apply a second stripe coat and the second full coat of Super Guard - 200 µm DFT, with slow rotation.

7. Allow final curing. Remove the masking and inspect before returning to service.

Note: Do not coat bearing journals, seal running surfaces or coupling fits. SepcoTech Aqua Guard may be used as an alternative where approved.

Includes AI generated images